ROMAC INDUSTRIES, INC.

INSTALLATION INSTRUCTIONS

NSF

Certified to NSF/ANSI/CAN 61

Read installation instructions first before installing. Check parts to ensure that no damage has occurred during transit and that no parts are missing. Also check the diameter of the pipe and the range marked on the saddle to ensure you have the proper size.

Style 306

Stainless Steel Service Saddles (w/pocketed design)

Step 1 • Check the saddle parts to ensure that no damage has occurred during transit and that no parts are missing.

Step 2 • Check the diameter of the pipe and the range marked on the saddle to ensure you are using the correct size saddle.

Step 3 • Thoroughly clean pipe surface that will be covered by the saddle. A suitable gasket lubricant should be used on rough surface pipe (such as DI and A/C) to ensure proper seal.

Step 4 • Back off nut to the end of the bolt – DO NOT REMOVE. Separate the ends of the saddle and position the tap such that the outlet is in the correct location.

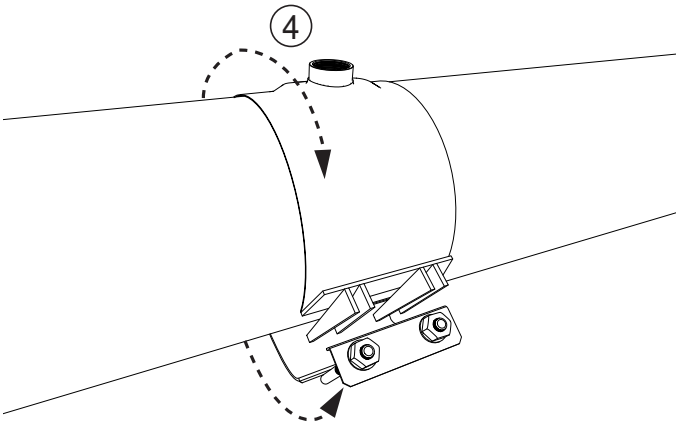

Step 5 • Slide lifter bar up the receiver lug profile and snap into place over the sidebar edge. Confirm that the gasket is aligned in its pocket.

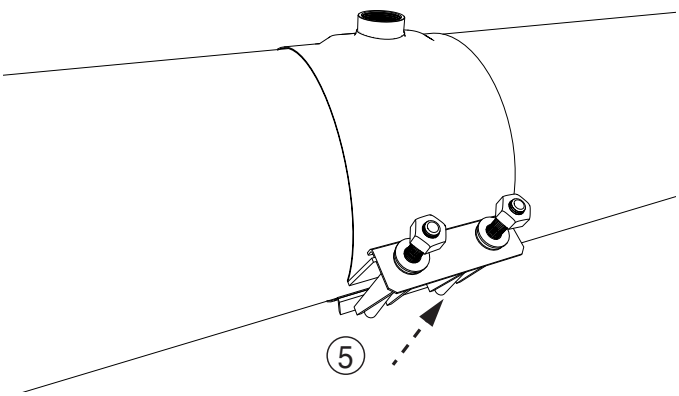

Step 6 • Tighten all nuts evenly in 20 ft-lbs. increments. Use a wrench with at least a 12 inch handle. Close all gaps between the shell and the pipe surface evenly, and torque according to specifications below. Bolt resistance will increase quickly once the saddle is properly installed.

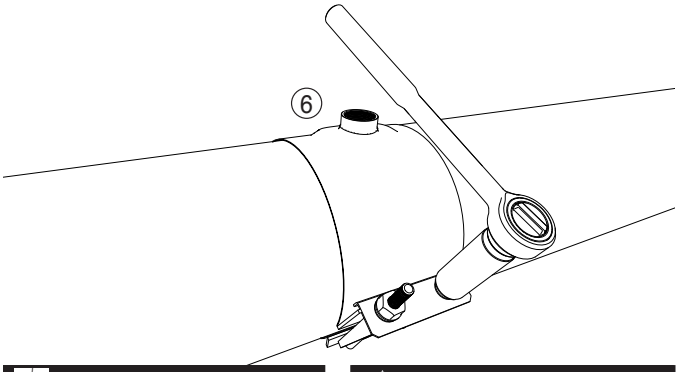

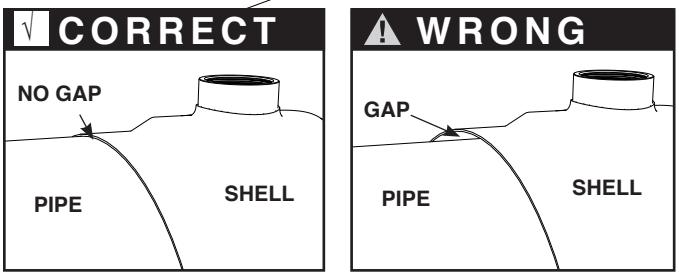

Nominal Main	Torque
2" to 4"	30 - 40 ft-lbs.
5" & Larger	50 - 60 ft-lbs.

Note:
35 ft-lbs. torque = 12" wrench w/35 lbs. force
60 ft-lbs. torque = 12" wrench w/60 lbs. force

Pressure test before tapping.

Backfill and compact carefully around saddle and service line.

Document #[illegible] 11/25/2024

21919 20th Avenue SE • Suite 100 • Bothell, WA 98021 • Phone (425) 951-6200 • 1-800-426-9341 • Fax (425) 951-6201

ROMAC INDUSTRIES, INC.

INSTALLATION INSTRUCTIONS

Style 306
Stainless Steel Service Saddles

PRECAUTIONS

1. Check diameter of pipe to make sure you are using correctly sized saddle.
2. Clean pipe to remove as much dirt and corrosion as possible from the surface.
3. Make sure no foreign material comes between the gasket and the pipe as the nuts are being tightened.
4. Avoid loose fitting wrenches, or wrenches too short to achieve proper torque on the nuts.
5. Keep threads free of foreign material to facilitate tightening.
6. Bolts are often not tightened enough when a torque wrench is not used. Take extra care in this situation to make sure that proper tightening occurs.
8. Pressure test for leaks before backfilling.
9. Backfill and compact carefully around saddle.
10. When reinstalling parts with stainless steel hardware there may be a loss in pressure holding ability due to worn or damaged threads during the original installation.

COMMON INSTALLATION PROBLEMS

1. Bolts are not tightened to the proper torque.
2. Rocks or debris between pipe and gasket.
3. Dirt on threads of bolts or nuts.
4. Not properly supporting the branch pipe.
5. Improper backfilling around branch pipe.
6. Receiver lugs are pinned against the edge of the shell, instead of overlapping.

21919 20th Avenue SE • Suite 100 • Bothell, WA 98021 • Phone (425) 951-6200 • 1-800-426-9341 • Fax (425) 951-6201